BRIGGS® SERIES FAUCETS

B484

SINGLE HANDLE LAVATORY
CERAMIC CARTRIDGE , LOW-LEAD WATERWAY

FEATURES

- 4″ Centerset faucet
- Ceramic Disc cartridges
- Metal Lever handles
- B484 includes 50/50 pop-up drain
- 1.5 gpm @ 60 PSI
- One year limited warranty against defects ufacturing workmanship

FINISHES

CHROME

BRUSHED NICKEL

MAINTENANCE

Please read the following before installation and operation.

1 Installation

Rinse the inlet pipe clean.
Connect the appropriate water supplies:
Hot water on the left side
Cold water on the right side

2 Technical Parameter

Water Pressure: 0.1 MPa - 0.86 MPa
Water Temperature: 41-160° F

3 Surface Maintenance

Remove as much surface dirt and film using clean water and cotton cloth.

Spray cleaners including mild liquid detergents, clear liquid glass cleaner, non-acidic and full dissolved powder cleaners or non-abrasive liquid polishers on a rag are acceptable to clean the faucet surface.

Once clean, rinse the faucet thoroughly with clean water to remove the cleaner then dry with soft cotton cloth.

CODES

- Certified to
  ASME A112.18.1-2012/ CSA B125.1-12
  NSF / ANSI 61-2013
  cUPC

SPECIFICATIONS

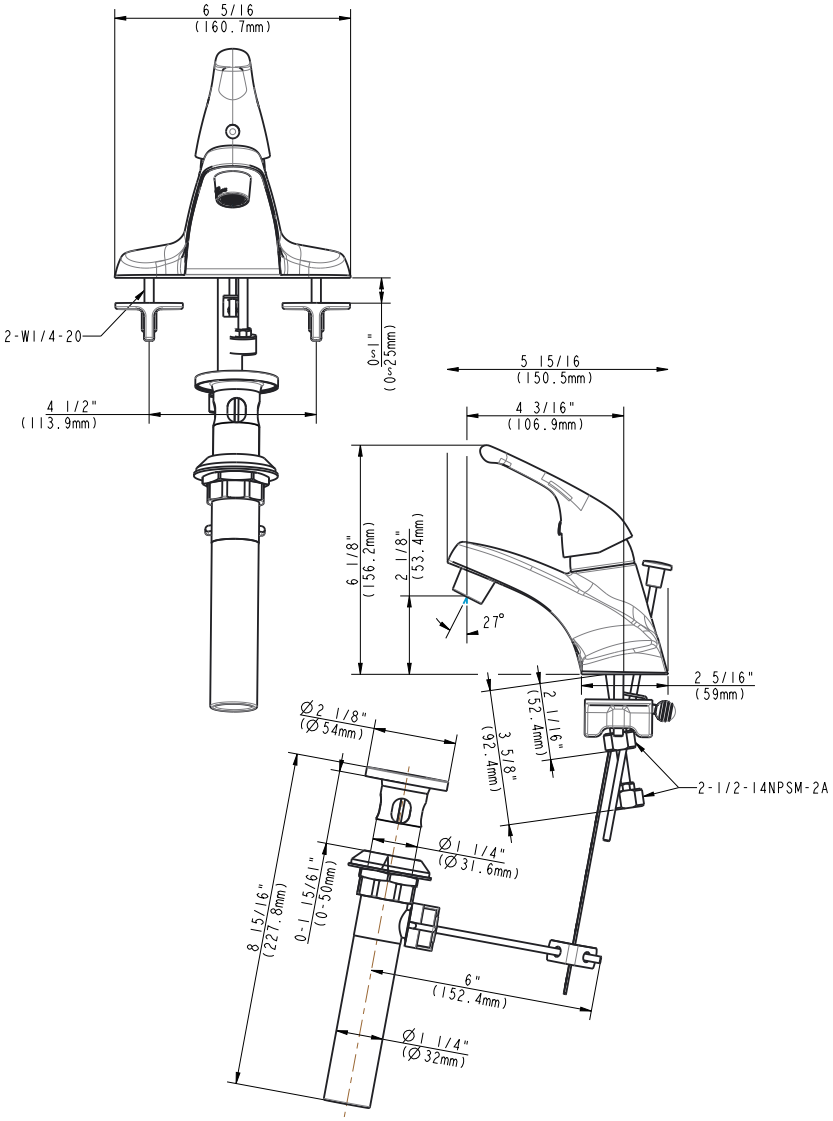

- For reference only (unit = MM and inch)
  Illustrations may not be to scale
  Dimensions are subject to change without notice

Briggs Plumbing Products
800-888-4458
www.briggsplumbing.com